PBS / EAGLE DETAIL: EAGLE - VISTA POINTE OUT-SWING BI-FOLD SECTIONS

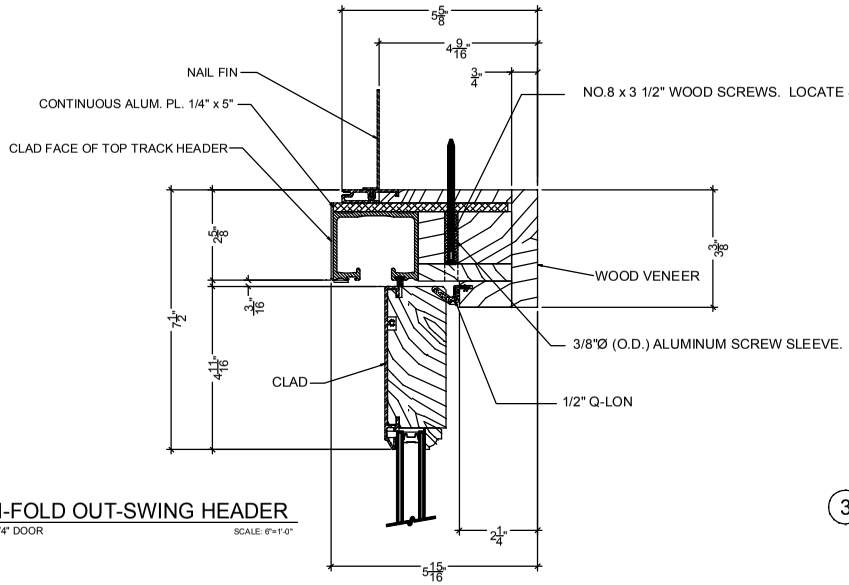

1 BI-FOLD OUT-SWING HEADER
1-3/4" DOOR SCALE: 6"=1'-0"

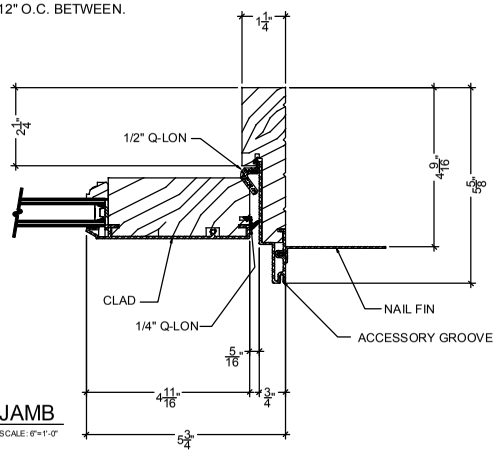

3 BI-FOLD OUT-SWING JAMB
1-3/4" DOOR SCALE: 6"=1'-0"

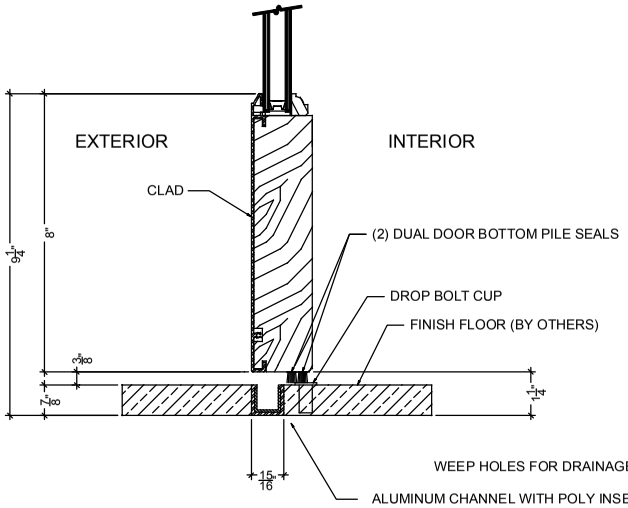

2 BI-FOLD OUT-SWING FLUSHTRAK SILL
1-3/4" DOOR SCALE: 6"=1'-0"

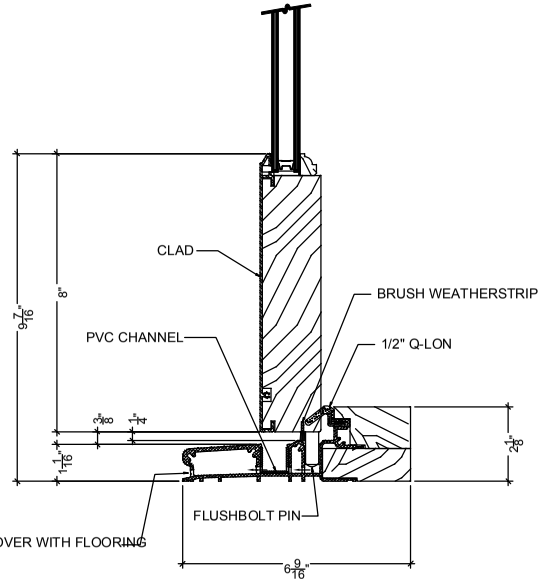

2 BI-FOLD OUT-SWING THRESHOLD
1-3/4" DOOR SCALE: 6"=1'-0"

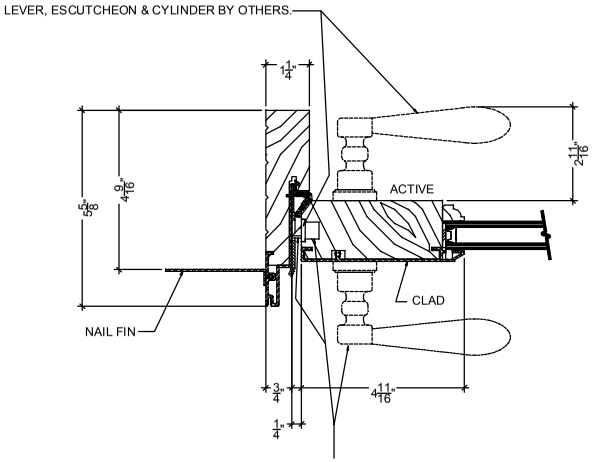

4 BI-FOLD OUT-SWING DOOR HARDWARE
1-3/4" DOOR SCALE: 6"=1'-0"

IMPORTANT NOTE:

FLUSH TRACK SYSTEM IS NOT WEATHERPROOF AND SHOULD ONLY BE USED IN WELL PROTECTED OR INTERIOR INSTALLATIONS. NO WEATHER PERFORMANCE IS GUARANTEED OR IMPLIED