Clad Eagle Axiom™ Casements

Installation Details

Scale: 3" = 1' 0"

2 X 4 Frame Construction

1/2" Sheathing, 1/2" Drywall, 4 9/16" Wall

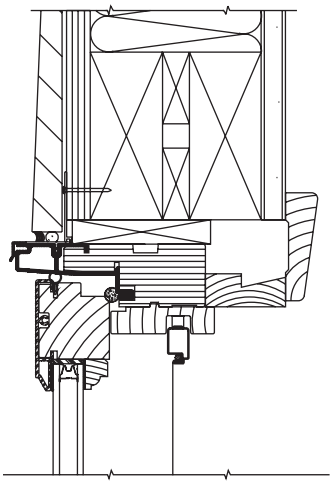

Head

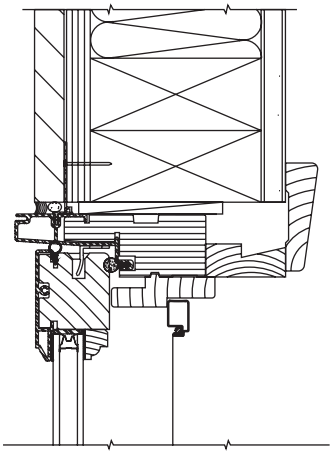

Jamb

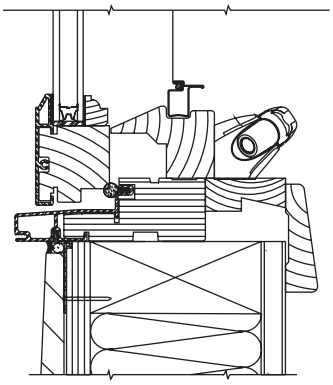

Sill

EAGLE Window and Door, Inc. reserves the right to change specifications without notice.